Correction to "Time-Resolved Coherent Anti-Stokes Raman Scattering of Graphene: Dephasing Dynamics of Optical Phonon." – Supporting Information.

*Juha Koivistoinen, Pasi Myllyperkiö, Mika Pettersson**

Nanoscience Center, Department of Chemistry, P.O. Box 35, FI-40014, University of Jyväskylä, Finland.

Corresponding Author

**Mika Pettersson. e-mail: mika.j.pettersson@jyu.fi*

RAMAN SPECTROSCOPY. Raman measurements were carried out with a home-built Raman setup in backscattering geometry using a single mode laser with 532 nm CW excitation wavelength (Alphalas, Monolas-532-100-SM). The beam was focused to the sample and the backscattered signal was collected with a 100x microscope objective (Nikon L Plan SLWD 100x with 0.70 N.A.). The scattered light was dispersed in a 0.5 m imaging spectrograph (Acton, SpectraPro 2500i) using a 600 g/mm grating (resolution: ~7 - 8 cm^{-1}). The signal was detected with an EMCCD camera (Andor Newton EM DU971N-BV) using 80 μm slit width. A beam

splitter was placed between the objective and the spectrometer in order to observe the exact measurement point visually. The Rayleigh scattering was attenuated with an edge filter (Semrock). The sample positioning was done with piezo-electric stage (Attocube). Measurements were performed with various measurement times and 1 mW excitation power. The Raman spectrum of the graphene sample was measured and it is presented in Supporting Figure 1.

The lineshape and linewidth of the G-band was analyzed in more detail by deconvolution of the measured spectrum with Gaussian instrument response function (IRF; FWHM = 7cm^{-1}). The analysis shows clearly Lorentzian shape and gives an upper limit for the G-band linewidth being 9 cm^{-1}. Analysis is shown in the lower panel of the Supporting Figure 1.

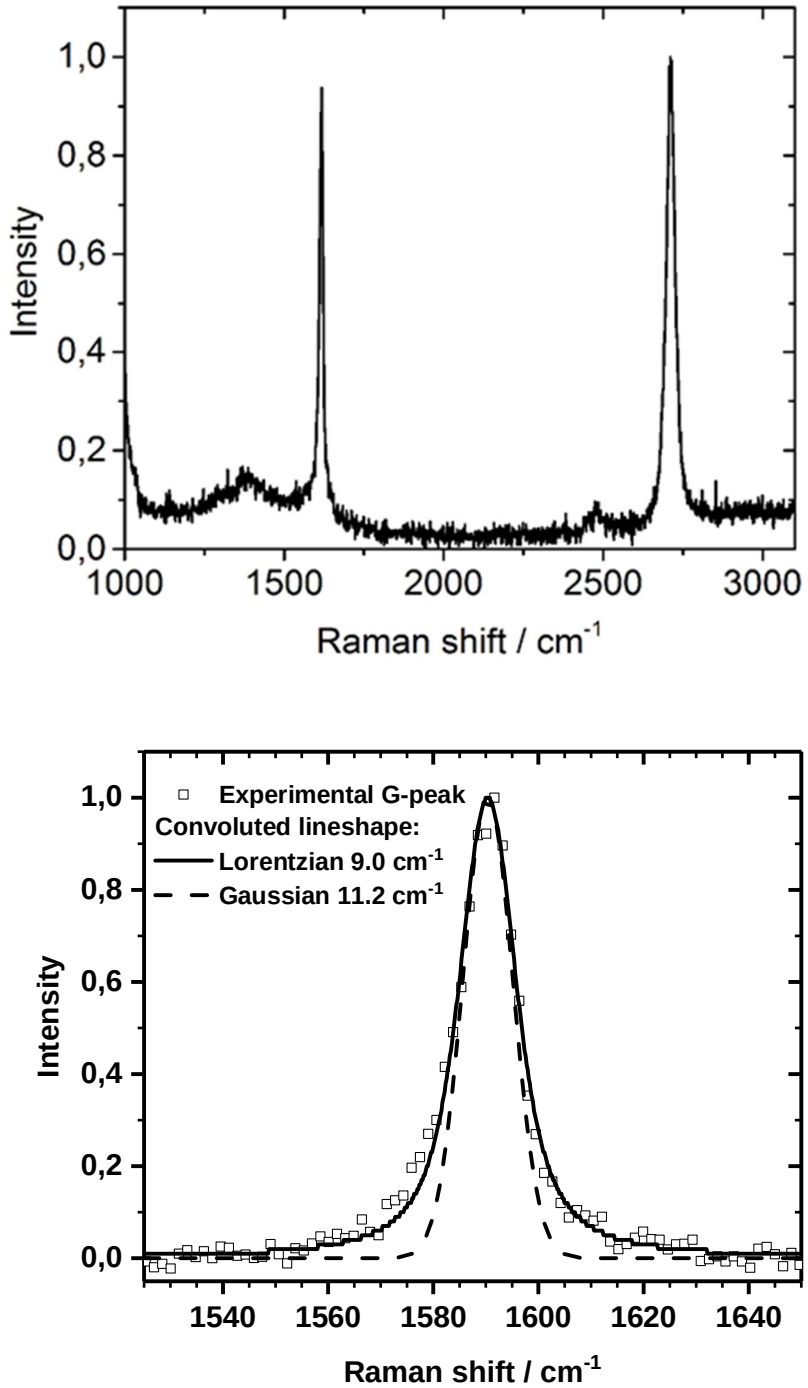

Supporting Figure 1. Upper panel: Raman spectrum of the single layer graphene sample on Si/SiO_2 substrate. **Lower panel:** Results of G-band fitting. Lorentzian lineshape (FWHM 9.0 cm^{-1}) convoluted with Gaussian IRF (FWHM 7 cm^{-1}) solid line and convoluted Gaussian lineshape (FWHM 11.2 cm^{-1}) dashed line.

CARS SPECTROSCOPY. Laser pulses for CARS measurements were produced with three home-built non-collinear optical parametric amplifiers (NOPA). The setup is presented schematically in Supporting Figure 2. The fundamental beam from an amplified femtosecond laser (Coherent Libra – S, 1 kHz, 1 mJ, 800 nm) was frequency-doubled and used as a pump in NOPAs. The CARS signal was produced with three beams having different center wavelengths: 605, 670 and 585 nm corresponding to Pump, Stokes and Probe pulses, respectively. The group velocity dispersion was compensated using prism compressor pairs (SF10) yielding pulse durations < 60 fs. For spectroscopic measurements, the three pulses were overlapped both spatially and temporally using conventional optics and optical delay lines. In total four separate signals were visible. Initially, the signals were verified as CARS signal by varying the spatial overlap condition of each beam separately, by blocking the beams and thus prohibiting the beams from propagating to the sample. Subsequently, the time trace of scanning the probe and Stokes pulses with respect to time-fixed pump pulse showed diminishing of the signal intensity when the three pulses are not overlapped in time. Each signal was characterized and assigned as a CARS signal corresponding to different beam combination, based on the behavior of the intensity of the beam when overlapping conditions were varied. The procedure is described in the main text. The resulting CARS signal $\omega_4(\omega_1, -\omega_2, \omega_3)$ had a central wavelength of 535 nm and Stokes shift was set to 1604 cm^{-1}. Since the pulses are spectrally wide they overlap with the energy of the G-mode (1590 cm^{-1}) of graphene. Intensities were adjusted by controlling pulse energies with neutral density filters. Pump, Stokes and probe beams were focused on the sample in the BOXCARS geometry to spatially distinguish signals arising from separate nonlinear optical processes. The sample was installed on a XYZ – translation stage for controlled

movement. Previously we have determined the focused spot size to be 50 um which is assumed to be valid also in this study. Signals were collected by two consecutive lenses with focal lengths (in this order) f = 50 mm and f = 100 mm. The signals were filtered from the excitation beams with two bandpass filters (Semrock FF02-531/22-25 and FF01-531/40-25 having transmission at λ = 531 ± 11 and 531 ± 22 nm, respectively). The signals were detected with cooled CCD imaging camera (Q-IMAGING Retiga R1 Scientific CCD Camera 01-RET-R1-R-M-14-C). The CARS signal ($\omega_1 - \omega_2 + \omega_3$) was strongest which was also entirely visible in the spectrum, whereas the wavelengths of the other signals deviated from the optimal spectral filtering conditions and some of the spectral intensity profile was left out from the detection, thus only partial signals generated from two pulse contributions ($2\omega_1 - \omega_2$), ($2\omega_3 - \omega_2$) and ($2\omega_3 - \omega_1$) were observed. The pulse energy for ω_1, ω_2 and ω_3 was 55 nJ, and 5 s / point accumulation time was utilized in the experiments with fixed pump delay. When the effect of fluence to the dephasing time was investigated, pulse energies for both $\omega_1$and ω_2 were varied and 25, 30, 40, 42.5, 55, 60 and 67.5 nJ was utilized (Supporting Figure 3) with 1 min / point accumulation time.

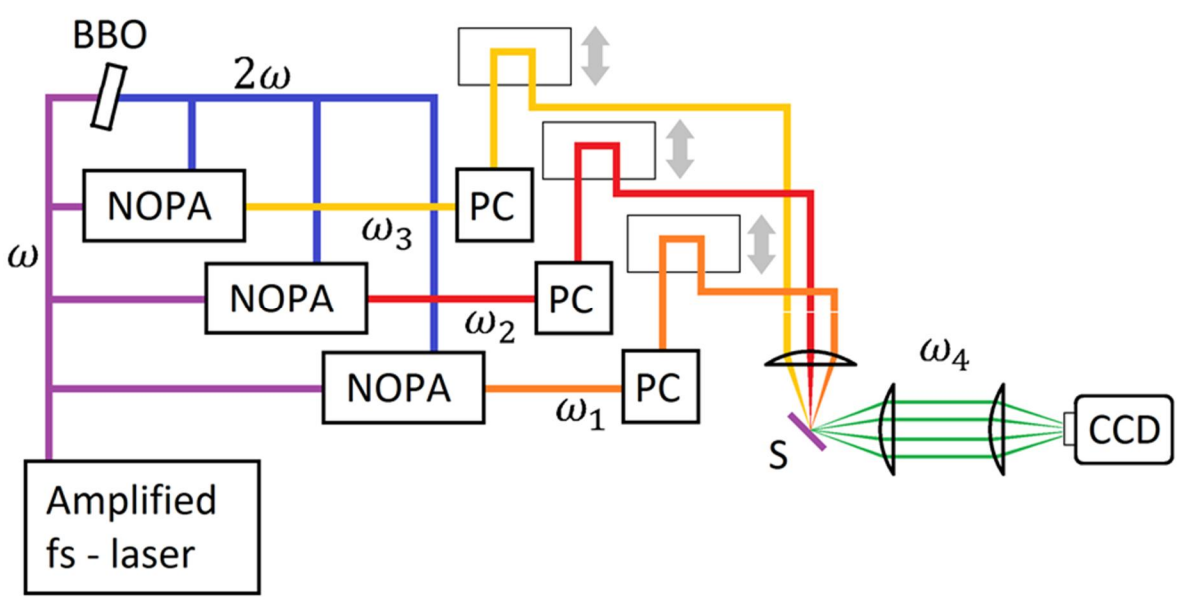

Supporting Figure 2. Representation of CARS setup used in the experiments. NOPA = Non-collinear optical paramentric amplifier, PC = prism compressor, BBO = beta-$Ba(BO_2)_2$, CCD = charge coupled device.

FLUENCE CALCULATION. The reported fluences were calculated by dividing pulse energy with spot area at focus, by assuming spot size of 50 μm (r = 25 μm) and approximating the total irradiated area as a circle and calculating fluence by dividing the pulse energy with the area of the focused spot.

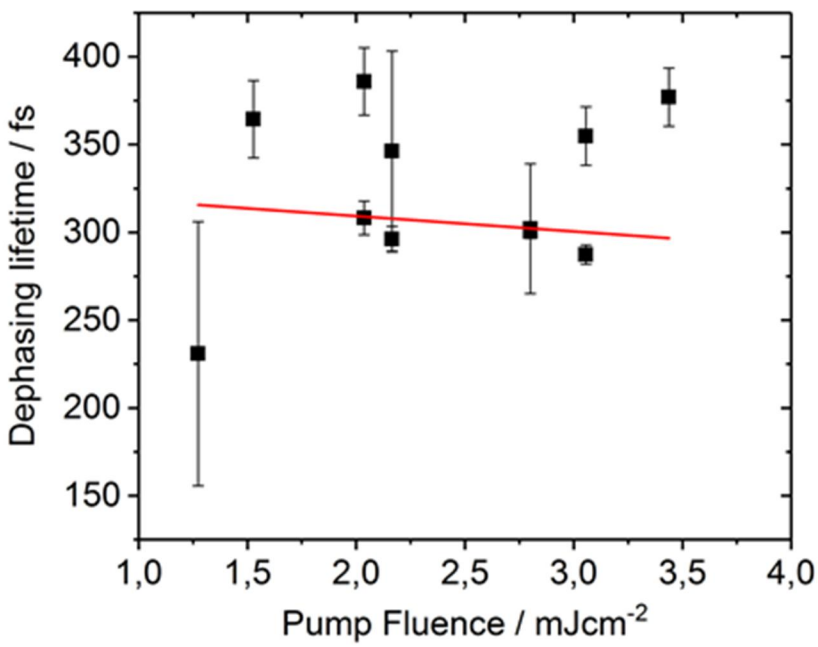

Supporting Figure 3. Dephasing time ($T_2/2$) of the G mode versus pump fluence. The red line is a linear fit with intercept at 325 ± 50 fs.