REV	DESCRIPTION	DWN	CHKR	APVD	DATE
D	SC-234-808-20 0				

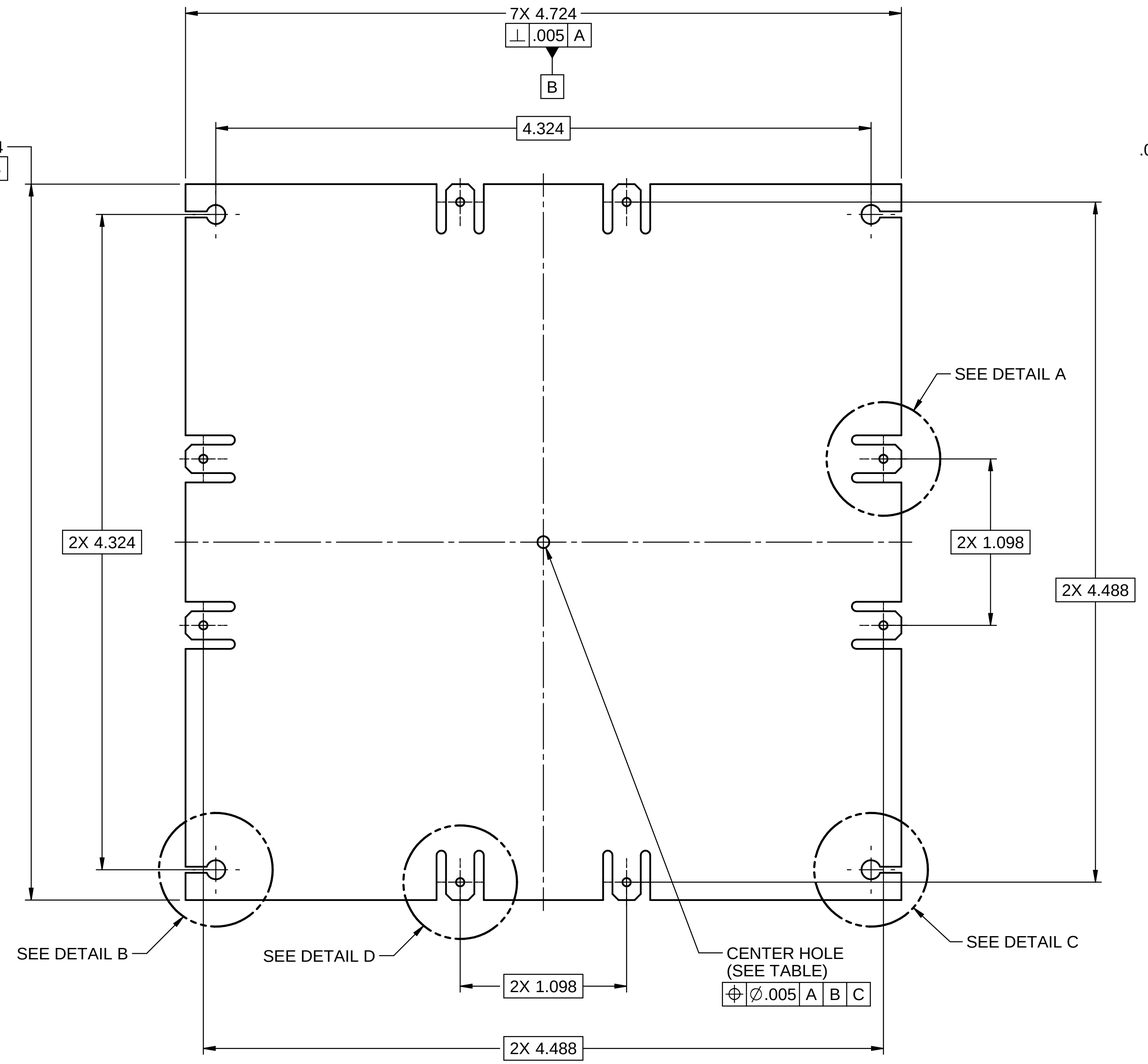

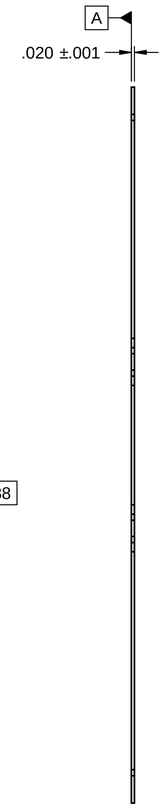

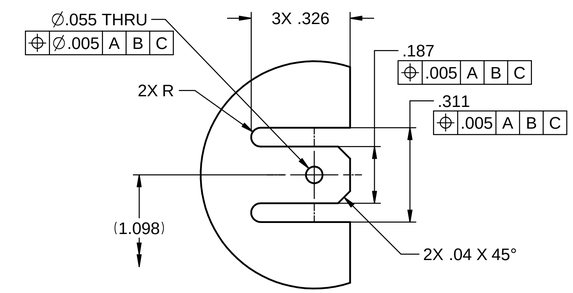

DETAIL A
SCALE 4:1
4X

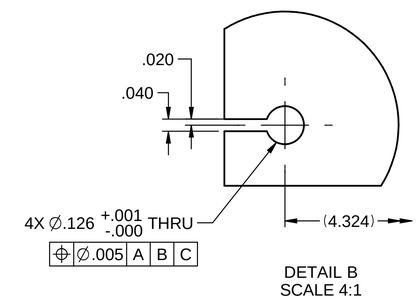

DETAIL B
SCALE 4:1

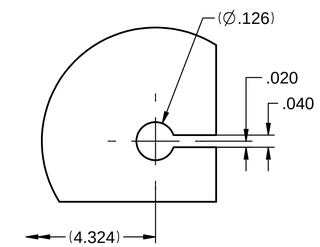

DETAIL C
SCALE 4:1

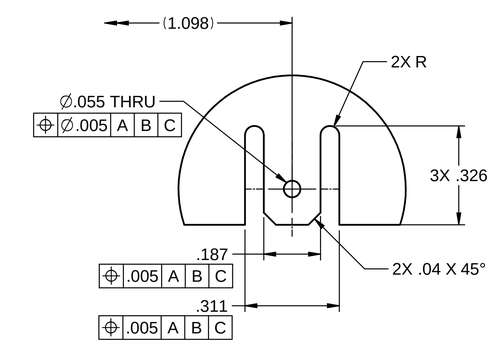

DETAIL D
SCALE 4:1
4X

NOTES: UNLESS OTHERWISE SPECIFIED

1. MATERIAL: STAINLESS STEEL 304, IN ACCORDANCE WITH ASTM A240. MILL SOURCE CERTIFICATES REQUIRED, INCLUDING HEAT NUMBER AND CHEMICAL ANALYSIS.
2. MACHINING: THE USE OF POLISHING, SANDING DISKS, ABRASIVE PAPER, OR GRINDING WHEELS IS PROHIBITED.
3. LUBRICANTS: REFER TO SLAC SPEC SC-700-866-47 FOR A LIST OF APPROVED LUBRICANTS AND COOLANTS.
4. CHEMICAL CLEANING: CLEAN PER SLAC STANDARDS FOR UHV APPLICATIONS AFTER MACHINING.
5. UHV HANDLING: AFTER UHV CLEANING OR PLATING, HANDLE WITH CLEAN LATEX OR NITRILE GLOVES IN/ON A CLEAN ROOM/SURFACE. FOR STORAGE OR SHIPPING: PLACE IN CLEAN, SEALED, VAC GRADE PLASTIC BAGS THAT ARE BACK-FILLED WITH NITROGEN, WITH PART NUMBER AND REV VISIBLE. ALTERNATIVELY, PARTS MAY BE WRAPPED IN CLEAN LINT FREE TISSUE AND UHV FOIL, AND SEALED IN CLEAN PLASTIC BAGS WITH PART NUMBER AND REV VISIBLE.

VMI SPECTROMETER PLATES

PART NUMBER	NAME	CENTER HOLE	CENTER CUT OUT	QTY	COMMENTS
PF-234-808-21	VMI PLATE 1	0.0787 in	N/A	3	
PF-234-808-22	VMI PLATE 2	1.3780 in	0.3937 in	1	SEE SHEET 2
PF-234-808-23	VMI PLATE 3	1.5748 in	0.3937 in	1	SEE SHEET 2
PF-234-808-24	VMI PLATE 4	1.7717 in	N/A	1	
PF-234-808-25	VMI PLATE 5	1.9685 in	N/A	1	
PF-234-808-26	VMI PLATE 6	2.1654 in	N/A	1	
PF-234-808-27	VMI PLATE 7	2.3622 in	N/A	1	
PF-234-808-28	VMI PLATE 8	2.5591 in	N/A	1	
PF-234-808-29	VMI PLATE 9	2.7559 in	N/A	3	
PF-234-808-30	VMI PLATE 10	2.9134 in	N/A	1	

VACUUM LEVEL 2 SPECIFICATION SLAC-I-120-204-003-00 APPLIES

	SST AISI TYPE 304
STOCK NO	MATERIAL DESCRIPTION

ESTIMATED MASS: .123 LB

CAD FILE NAME: sc23480820-0.dft

SA-234-808-43
NEXT ASSEMBLIES:

DIMENSIONING AND TOLERANCING IS IAW ASME Y14.5-2009

UNLESS OTHERWISE SPECIFIED
DIMENSIONS ARE IN INCHES.
TOLERANCES:
BREAK EDGES .005-.015
INTERNAL CORNERS R.015 MAX
FRACTIONS ± ---
DEC .XX± .01
.XXX± .005
.XXXX± ---
ANGLE ± 1°
ALL SURF 63

SCALE: 4:1
DO NOT SCALE DRAWING

SLAC NATIONAL ACCELERATOR LABORATORY
U.S. DEPARTMENT OF ENERGY

THE DRAWINGS, SPECIFICATIONS AND OTHER DATA HEREIN PROVIDED SHALL NOT BE COPIED, PUBLISHED OR OTHERWISE FURTHER DISSEMINATED WITHOUT PRIOR WRITTEN PERMISSION OF STANFORD UNIVERSITY/SLAC

		DATE
ENGR	D. RICH	
DWN	M. OWENS	20170602
CHKR	O. FRENER	

APPROVALS
D. RICH
J. CRYAN
S. LI

LCLS DIAGNOSTIC SYSTEMS
VMI PLATE STACK
VMI PLATES

DRAWING NUMBER: SC-234-808-20
REVISION NUMBER: A
D
SH 1 OF 2

SLAC FORMAT V3.3

REV	DESCRIPTION	DWN	CHKR	APVD	DATE
D	0 SC-234-808-20				

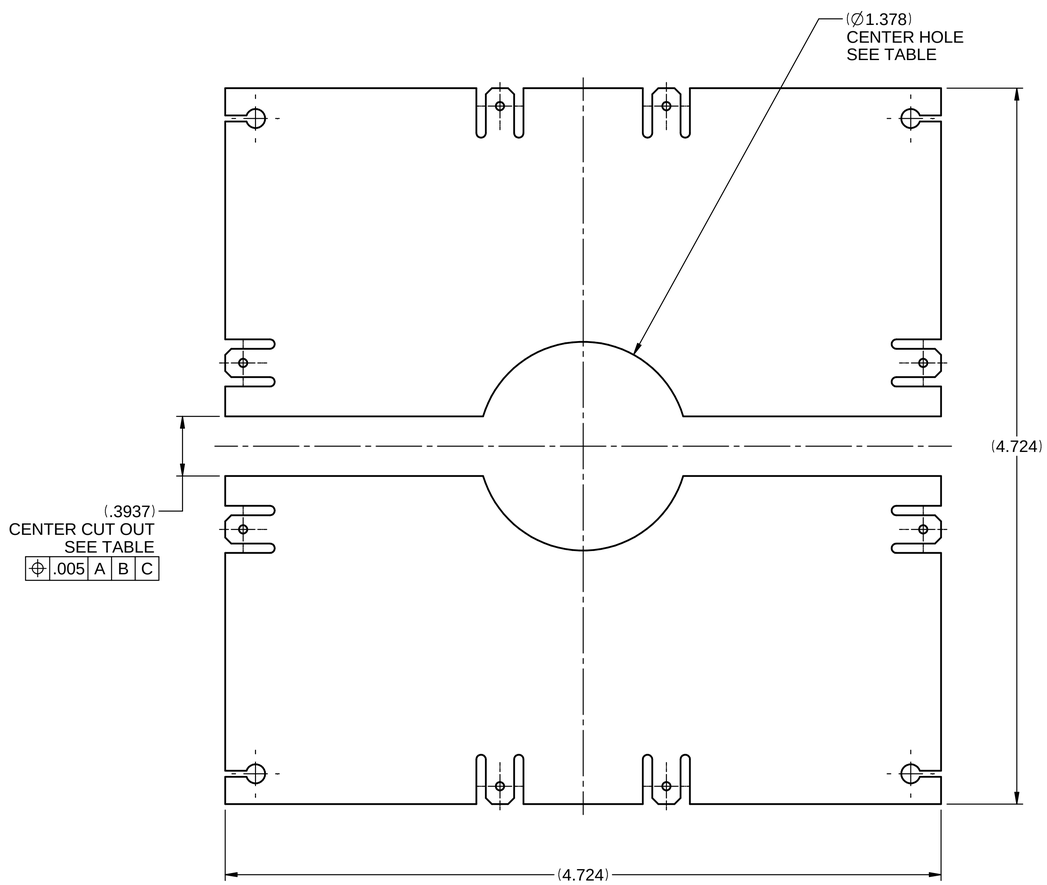

VMI PLATE 2
SCALE 2:1

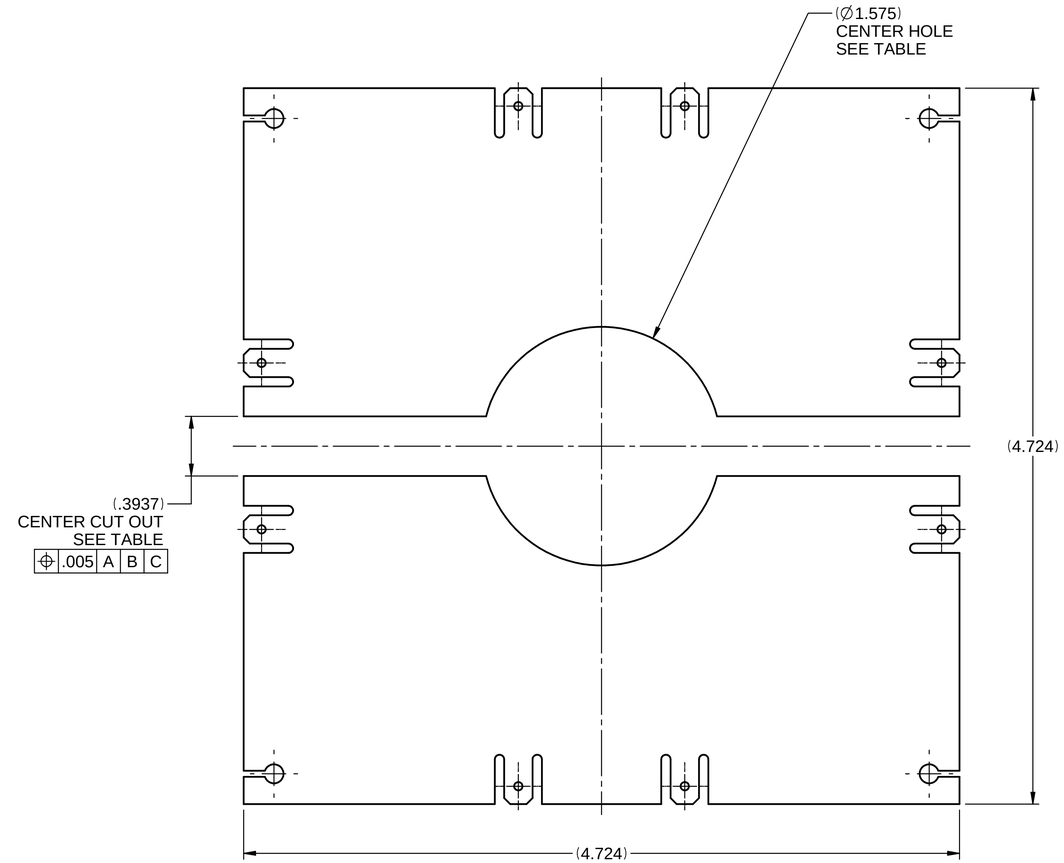

VMI PLATE 3
SCALE 2:1

LCLS
VACUUM LEVEL 2
SPECIFICATION
SLAC-I-120-204-003-00
APPLIES

SA-234-808-43
NEXT ASSEMBLIES:

DIMENSIONING AND TOLERANCING IS IAW ASME Y14.5-2009

UNLESS OTHERWISE SPECIFIED
DIMENSIONS ARE IN INCHES.
TOLERANCES:
BREAK EDGES .005-.015
INTERNAL CORNERS R.015 MAX
FRACTIONS ± ---
DEC .XX± .01
.XXX± .005
.XXXX± ---
ANGLE ± 1°
ALL SURF 63

SCALE: 2:1 DO NOT SCALE DRAWING
ESTIMATED MASS: .123 LB
CAD FILE NAME: sc23480820-0.dft

SLAC NATIONAL ACCELERATOR LABORATORY
U.S. DEPARTMENT OF ENERGY

THE DRAWINGS, SPECIFICATIONS AND OTHER DATA HEREIN PROVIDED SHALL NOT BE COPIED, PUBLISHED OR OTHERWISE FURTHER DISSEMINATED WITHOUT PRIOR WRITTEN PERMISSION OF STANFORD UNIVERSITY/SLAC

		DATE
ENGR	D. RICH	
DWN	M. OWENS	20170602
CHKR	O. FRENER	

APPROVALS
D. RICH
J. CRYAN
S. LI

LCLS DIAGNOSTIC SYSTEMS
VMI PLATE STACK
VMI PLATES

DRAWING NUMBER: SC-234-808-20
REVISION NUMBER: A
D
SH 2 OF 2

SLAC FORMAT V3.3